PFISTER

Marielle™

Kitchen Faucet

LG26-3NCC Finish*(CC)* ❑
LG26-3NSS Finish*(SS)* ❑
LG26-3NYYFinish*(YY)* ❑
LG26-4NCC Finish*(CC)* ❑
LG26-4NSS Finish*(SS)* ❑
LG26-4NUU Finish*(UU)* ❑
LG26-4NYY Finish*(YY)* ❑

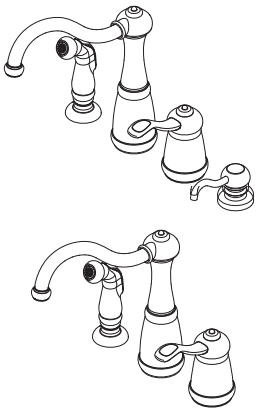

- Single Control
- 3 or 4-Hole Installation

Specifications

Features

- 1.75 GPM Flow Rate
- Soap/ Lotion Dispenser Included (4N Only)
- High Arc Decorative Spout
- Flexible Stainless Steel Connections
- Quick Connect Installation
- Up to 2 1/2" of Deck Clearance
- 3-Hole Installation (3N Only)
- 4-Hole Installation (4N Only)
- Includes Matching Side Spray
- Quick Connect Side Spray
- Pforever Seal Ceramic Disc Valve
- Pforever Warranty®

Code Compliance

Pfister products are designed and manufactured in compliance with the following standards and codes:

- IAPMO Certified
- CSA B125 Certified
- ASME A112.18.1
- NSF 61/9 Annex G (Low lead)
- ADA Compliant-ANSI A117.1 (Lever handles only)

Dimensions

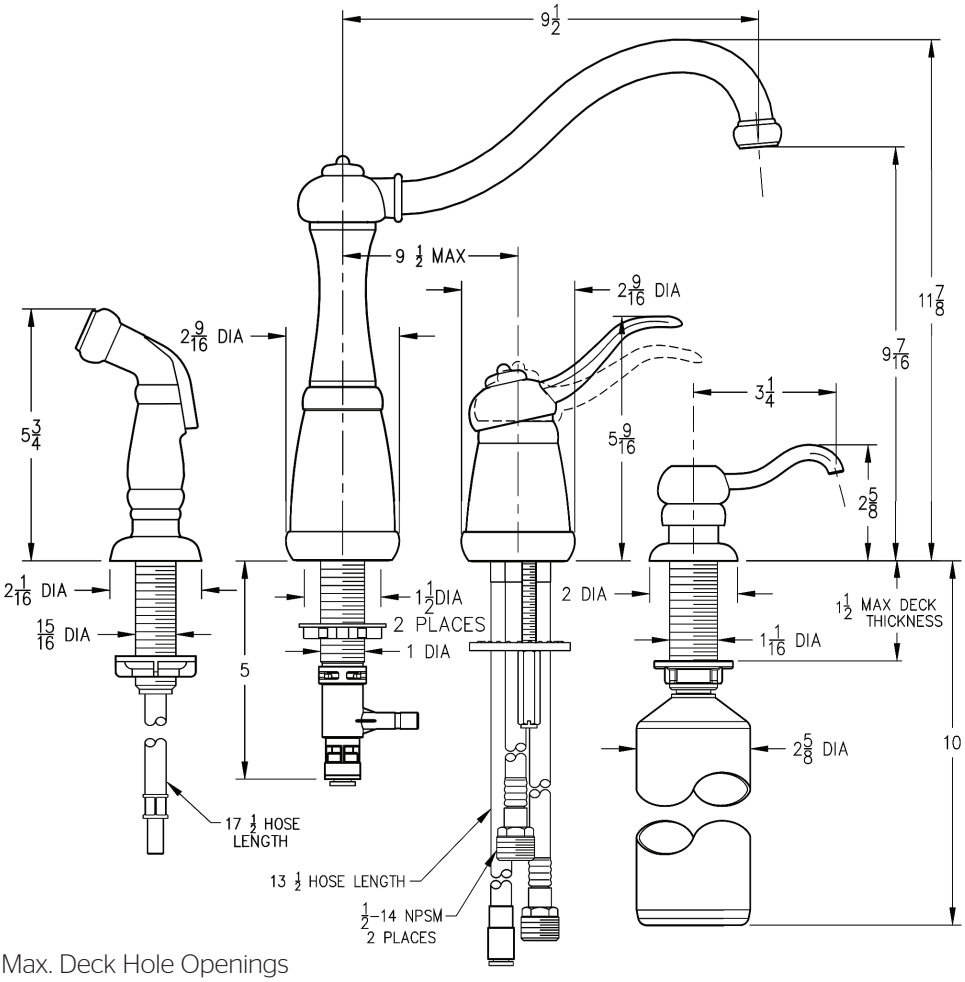

Ø1-3/8 Min to Ø1-1/2 Max. Deck Hole Openings

Copyright © 2016, Pfister Inc.