Product data sheet (PDF)

Axor Montreux

Axor Montreux Widespread Faucet with Lever Handles, Bridge Model

Description

- Solid brass
- 90-degree ceramic cartridge
- Includes pop-up assembly
- Spout arm swivels 150 degrees
- Flow rate 1.5 GPM
- ADA compliant

Finishes	Part no.	List Price
Chrome	16511001	$ 1,217.00
Brushed Nickel	16511821	$ 1,768.00

Product image
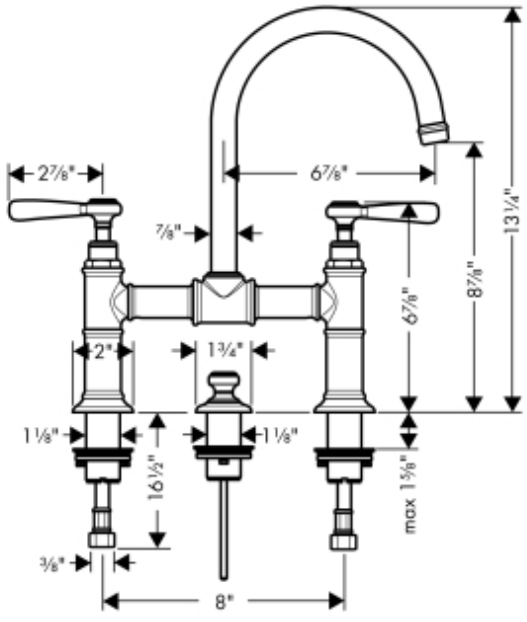
Scale drawing