Grandera

20 419 High Spout Lavatory Wideset

Features

- Solid Brass Construction
- GROHE SilkMove Ceramic Cartridge
- Metal Lever Handles
- GROHE AquaGuide - allows you to channel the flow of the water from the faucet

Flow Rate

1.5 gpm

Code Compliance

ASME/ANSI A112.18.1M
CSA Standard B125.1-05
ADA Compliant

Available Finishes

000 Starlight® Chrome
EN0 Infinity Brushed Nickel

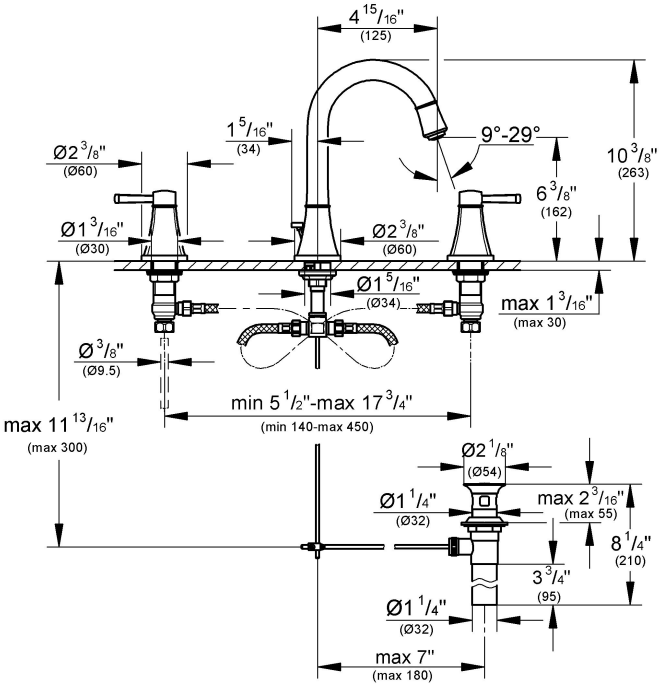

GROHE America, Inc | 200 North Gary Avenue, Suite G, Roselle, IL 60172 | +1 (800) 444-7643 | Fax: +1 (800) 225-2778
GROHE Canada, Inc | 1230 Lakeshore Road East, Mississauga, Ontario | Canada L5E 1E9 | +1 (905) 271-2929 | Fax: +1 (905) 271-9494