Kensington

25 073 Roman tub filler with hand shower

Description

79" Hose
GROHE SilkMove® Ceramic Cartridges
1/2" Valves
10" Diverter Spout
Swarovski® Crystal Handles (sold separately)

Flow Rate

13.2 GPM

Code Compliance

ASME/ANSI A112.18.1M

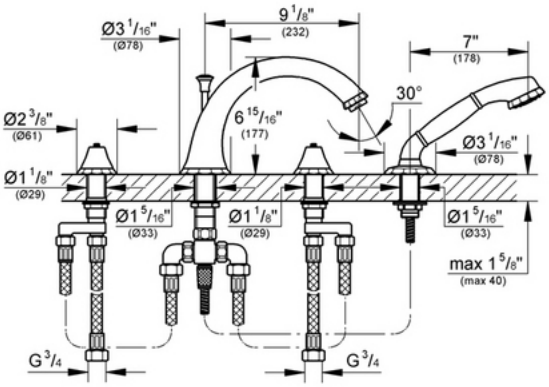

Finish Options

25 073 OOO Starlight® Chrome
25 073 ENO Infinity Brushed Nickel

GROHE America, Inc 241 Covington Drive, Bloomingdale, IL 60108 630-582-7711 Fax:630-582-7722
GROHE Canada, Inc 1226 Lakeshore Road East, Mississauga, Ontario Canada L5E 1E9 905.271.2929 Fax:905.271.9494