American Standard

DECLYN™ WALL-HUNG LAVATORY

VITREOUS CHINA

DECLYN WALL-HUNG LAVATORY

- Vitreous china
- Rear overflow
- Soap depression
- Faucet ledge.
  Shown with 2000.101 Ceramix faucet (not included)

❑ **0321.026** With wall hanger (Illustrated)
Faucet holes on 102mm (4") centers

❑ **0321.075** For concealed arms support
Faucet holes on 102mm (4") centers

Nominal Dimensions:
483 x 432mm
(19" x 17")

Bowl sizes:
362mm (14-1/4") wide,
273mm (10-3/4") front to back,
152mm (6") deep

Fixture Dimensions conform to ANSI Standard A112.19.2

To Be Specified

- ❑ Color:
- ❑ Faucet*:
- ❑ Faucet Finish:
- ❑ Supplies:
- ❑ 1-1/4" Trap:
- ❑ Nipple:
- ❑ Concealed Arms Support (by others):

* See faucet section for additional models available

● Top of front rim mounted 864mm (34") maximum from finished floor.
MEETS THE AMERICAN DISABILITIES ACT GUIDELINES AND ANSI A117.1 REQUIREMENTS FOR PEOPLE WITH DISABILITIES

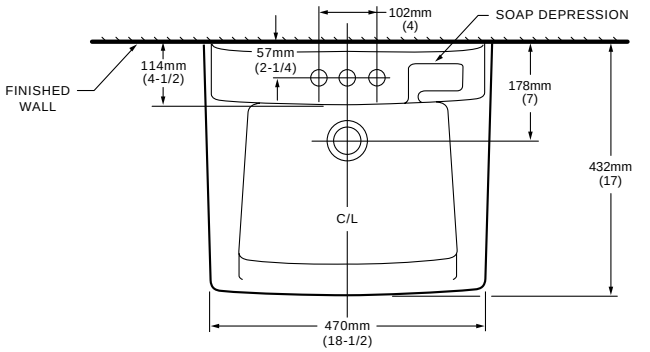

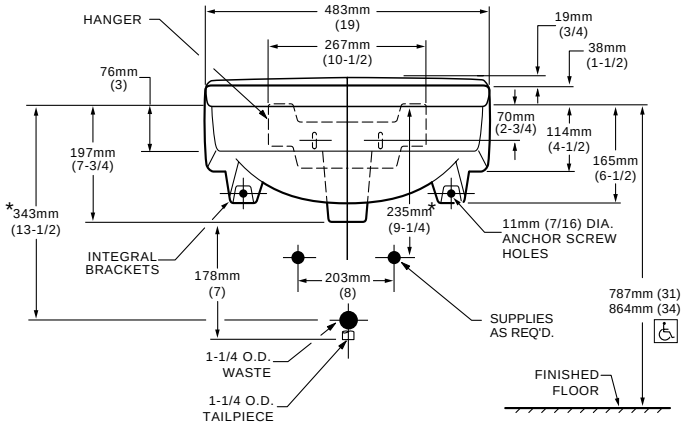

NOTES:
* DIMENSIONS SHOWN FOR LOCATION OF SUPPLIES AND "P" TRAP ARE SUGGESTED.
PROVIDE SUITABLE REINFORCEMENT FOR ALL WALL SUPPORTS.
FITTINGS NOT INCLUDED AND MUST BE ORDERED SEPARATELY.
IMPORTANT: Dimensions of fixtures are nominal and may vary within the range of tolerances established by ANSI Standard A112.19.2.
These measurements are subject to change or cancellation. No responsibility is assumed for use of superseded or voided pages.

SPS 0321

© 1995 American Standard Inc.